172-65191MA-03 (RT3A) 28 April 2009

ISO 9001/ ISO 14001

Manufacturer

TLV. CO., LTD.

Kakogawa, Japan

is approved by LRQA LTD. to ISO 9001/14001

Instruction Manual

Radiator Trap

RT3A

Contents

Introduction

Thank you for purchasing the TLV Radiator Trap.

This product has been thoroughly inspected before being shipped from the factory. When the product is delivered, before doing anything else, check the specifications and external appearance to make sure nothing is out of the ordinary. Also be sure to read this manual carefully before use and follow the instructions to be sure of using the product properly.

The RT3A radiator trap is used in buildings such as schools, hotels, hospitals and offices, to discharge only low temperature condensate generated in steam-using equipment used for space heating.

If detailed instructions for special order specifications or options not contained in this manual are required, please contact TLV for full details.

This instruction manual is intended for use with the model(s) listed on the front cover. It is necessary not only for installation but for subsequent, maintenance, disassembly/reassembly and troubleshooting. Please keep it in a safe place for future reference.

Safety Considerations

- Read this section carefully before use and be sure to follow the instructions.
- Installation, inspection, maintenance, repairs, disassembly, adjustment, and valve opening/closing should be carried out only by trained maintenance personnel.
- The precautions listed in this manual are designed to ensure safety and prevent equipment damage and personal injury. For situations that may occur as a result of erroneous handling, three different types of cautionary items are used to indicate the degree of urgency and the scale of potential damage and danger: DANGER, WARNING and CAUTION.
- The three types of cautionary items above are very important for safety: be sure to observe all of them as they relate to installation, use, maintenance, and repair. Furthermore, TLV accepts no responsibility for any accidents or damage occurring as a result of failure to observe these precautions.

Symbols

⚠	**Indicates a DANGER, WARNING or CAUTION item.**
⚠ DANGER	Indicates an urgent situation which poses a threat of death or serious injury
⚠ WARNING	Indicates that there is a potential threat of death or serious injury
⚠ CAUTION	Indicates that there is a possibility of injury or equipment / product damage

⚠ CAUTION	**Install properly and DO NOT use this product outside the recommended operating pressure, temperature and other specification ranges.** Improper use may result in such hazards as damage to the product or malfunctions that may lead to serious accidents. Local regulations may restrict the use of this product to below the conditions quoted.
	Take measures to prevent people from coming into direct contact with product outlets. Failure to do so may result in burns or other injury from the discharge of fluids.
	When disassembling or removing the product, wait until the internal pressure equals atmospheric pressure and the surface of the product has cooled to room temperature. Disassembling or removing the product when it is hot or under pressure may lead to discharge of fluids, causing burns, other injuries or damage.
	Be sure to use only the recommended components when repairing the product, and NEVER attempt to modify the product in any way. Failure to observe these precautions may result in damage to the product and burns or other injury due to malfunction or the discharge of fluids.

Safety cautions continued on next page.

⚠CAUTION	**Do not use excessive force when connecting threaded pipes to the product.** Over-tightening may cause breakage leading to fluid discharge, which may cause burns or other injury.
	Use only under conditions in which no freeze-up will occur. Freezing may damage the product, leading to fluid discharge, which may cause burns or other injury.
	Use only under conditions in which no water hammer will occur. The impact of water hammer may damage the product, leading to fluid discharge, which may cause burns or other injury.

Checking the Piping

⚠CAUTION **Use only under conditions in which no water hammer will occur. The impact of water hammer may damage the product, leading to fluid discharge, which may cause burns or other injury.**

Check to make sure that the pipes to be connected to the trap have been installed properly.

1. Is the pipe diameter suitable?
2. Has sufficient space been secured for maintenance?
3. Have isolation valves been installed at the inlet and outlet?
   If the outlet is subject to back pressure, has a check valve (TLV-CK) been installed?
4. Is the inlet pipe as short as possible, with as few bends as possible, and installed so the liquid will flow naturally down into the trap?

Operation

Principles of Steam and Condensate Discharge

1. At start-up, temperatures are low so the thermo-element (A) is contracted, holding the valve open and allowing the rapid discharge of initial air and condensate.

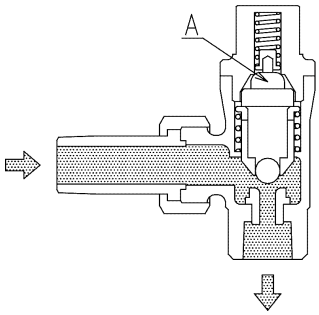

2. After the discharge of initial condensate, the temperature of the condensate rises. When it reaches approximately 100 °C (212 °F), the thermo-element (A) expands, causing the valve to close.

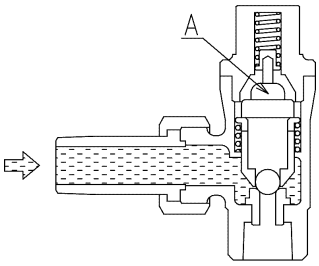

3. After the valve closes, condensate at approximately 95 °C (203 °F)and below accumulates, causing the thermo-element (A) to contract again, opening the valve and discharging the accumulated condensate.

4. When the condensate temperature rises to over approximately 100 °C (212 °F) again, the valve closes as in step 2 above.

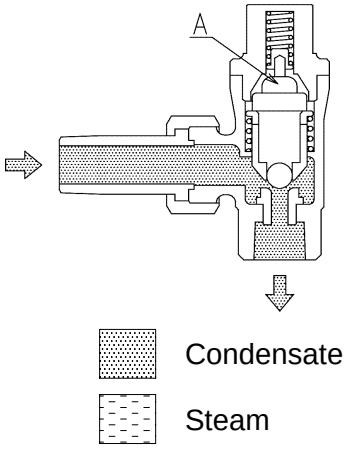

Specifications

CAUTION **Install properly and DO NOT use this product outside the recommended operating pressure, temperature and other specification ranges. Improper use may result in such hazards as damage to the product or malfunctions which may lead to serious accidents. Local regulations may restrict the use of this product to below the conditions quoted.**

CAUTION **Use only under conditions in which no freeze-up will occur. Freezing may damage the product, leading to fluid discharge, which may cause burns or other injury.**

Model	Size mm (in)	Maximum Operating Pressure **PMO** MPaG (psig)	Maximum Operating Temperature **TMO** °C (°F)	Maximum Allowable Pressure **PMA*** MPaG (psig)	Maximum Allowable Temperature **TMA*** °C (°F)	Weight kg (lb)
RT3A	15 ($^1/_2$)	0.3 (45)	144 (292)	0.3 (45)	144 (292)	0.6 (1.3)
	20 ($^3/_4$)					0.7 (1.5)
NOTE: The RT3A has a set condensate discharge temperature. (Approximately 95 – 100 °C (203 - 212°F))						

(1 MPa = 10.197 kg/cm^2)

* Maximum allowable pressure (PMA) and maximum allowable temperature (TMA) are PRESSURE SHELL DESIGN CONDITIONS, **NOT** OPERATING CONDITIONS.

NOTE: Specifications for products with customized specifications may differ from those listed above. For further details, please refer to the product drawing.

Configuration

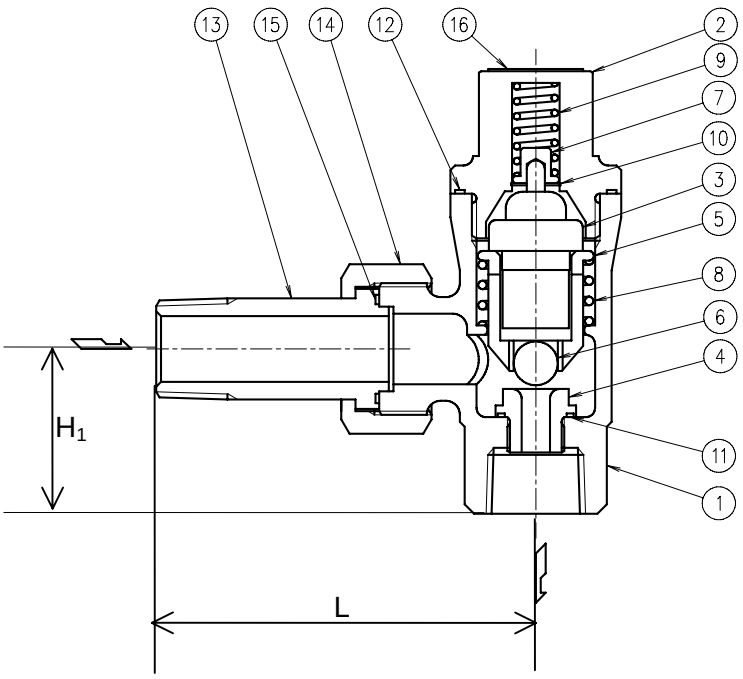

No.	Name
1	Body
2	Cover
3	Thermo-element
4	Valve Seat
5	Element Guide
6	Valve
7	Spring Guide
8	Return Spring
9	Over-expansion Spring
10	Snap Ring
11	Valve Seat Gasket
12	Cover Gasket
13	Union Nipple
14	Union Nut
15	Union Gasket
16	Nameplate

Diameter mm	(in)	L mm	(in)	H_1 mm	(in)
15	($^1/_2$)	80	($3^1/_8$)	35	($1^3/_8$)
20	($^3/_4$)	87	($3^1/_{16}$)	41	($1^5/_8$)

Installation

CAUTION **Install properly and DO NOT use this product outside the recommended operating pressure, temperature and other specification ranges. Improper use may result in such hazards as damage to the product or malfunctions which may lead to serious accidents. Local regulations may restrict the use of this product to below the conditions quoted.**

CAUTION **Take measures to prevent people from coming into direct contact with product outlets. Failure to do so may result in burns or other injury from the discharge of fluids.**

CAUTION **Do not use excessive force when connecting threaded pipes to the product. Over-tightening may cause breakage leading to fluid discharge, which may cause burns or other injury.**

Installation, inspection, maintenance, repairs, disassembly, adjustment and valve opening/closing should be carried out only by trained maintenance personnel.

1. Before installation, be sure to remove all protective seals.
2. Before installing the product, open the inlet valve and blow out the piping to remove any piping scraps, dirt and oil. Close the inlet valve after blowdown.
3. Install the product so the arrow on the body is pointing in the direction of condensate flow.
4. Install in the piping with the inlet horizontal and the outlet vertical.
5. Install a condensate outlet valve and piping.
6. Open the inlet and outlet valves gradually and check to make sure that the product functions properly.

If there is a problem, determine the cause using the “Troubleshooting” section in this manual.

Maintenance

CAUTION **Take measures to prevent people from coming into direct contact with product outlets. Failure to do so may result in burns or other injury from the discharge of fluids.**

CAUTION **Be sure to use only the recommended components when repairing the product, and NEVER attempt to modify the product in any way. Failure to observe these precautions may result in damage to the product or burns or other injury due to malfunction or the discharge of fluids.**

Operational Check

A visual inspection of the following items should be done on a daily basis to determine whether the product is operating properly or has failed. Periodically (at least biannually) the operation should also be checked by using diagnostic equipment such as a stethoscope.

If the trap should fail, it may cause damage to piping and equipment, resulting in faulty or low quality products or losses due to leakage.

Normal	:	Condensate is discharged together with a small amount of flash steam. The trap usually operates intermittently or with continuous dripping.
Blocked (Discharge Impossible)	:	No condensate is discharged. The surface temperature of the trap is low.
Blowing	:	Live steam continually flows from the outlet and there is a continuous hissing sound of flow.
Steam Leakage	:	Live steam is discharged through the trap outlet together with condensate, accompanied by a high-pitched sound

(When conducting a visual inspection, flash steam is sometimes mistaken for steam leakage. For this reason, the use of a steam trap diagnostic instrument [such as TLV Pocket TrapMan if appropriate] in conjunction with the visual inspection is highly recommended.)

Parts Inspection

When parts have been removed, or during periodic inspections, use the following table to inspect the parts and replace any that are found to be defective.

Procedure
Gasket(s): check for warping and damage
Valve: check for scratches, warping and wear
Coil Springs: check for abnormalities
Thermo-element: check for damage or signs of wax leakage
(After cleaning the inside of the body) Gasket(s): check for warping and damage Valve Seat: check for scratches, warping and wear

Disassembly / Reassembly

⚠CAUTION **When disassembling or removing the product, wait until the internal pressure equals atmospheric pressure and the surface of the product has cooled to room temperature. Disassembling or removing the product when it is hot or under pressure may lead to discharge of fluids, causing burns, other injuries or damage.**

Use the following procedures to remove components. Use the same procedures in reverse to reassemble. (Installation, inspection, maintenance, repairs, adjustment and valve opening/closing should be carried out only by trained maintenance personnel.)

Dissassembly / Reassembly Procedure

Part	During Disassembly	During Reassembly
Union Nut	If removing the trap from the piping, first remove the union nut with a wrench	—
Union Nipple	Remove from piping only if necessary	—
Union Gasket	—	Replace with a new gasket if warped or damaged
Cover	Remove the cover from the body using a wrench (do not disassemble the cover itself)	Consult the table of tightening torques and tighten to the proper torque
Cover Gasket	—	Replace with a new gasket if warped or damaged
Thermo-element	Remove from the body being careful not to bend the push-pin	Replace with a new thermo-element if damaged or leaking wax
Element Guide (Valve)	Remove from the body being careful not to scratch the valve seating surface	Insert into body being careful not to scratch the valve surface
Return Spring	Remove from the body	Place inside body
Valve Seat	Remove from the body using a box wrench being careful not to scratch seat surface	Insert being careful not to scratch seat surface; consult the table of tightening torques and tighten to the proper torque
Valve Seat Gasket	—	Replace with a new gasket if warped or damaged

Torque Tightening Table

Part	Connection Size		Torque		Distance Across Flats	
	mm	(in)	N·m	(lbf·ft)	mm	(in)
Union Nut	15	($^1/_2$)	—		32	($1^1/_4$)
	20	($^3/_4$)	—		38	($1^1/_2$)
Union Nipple	15	($^1/_2$)	—		19	($^3/_4$)
	20	($^3/_4$)	—		24	($^{15}/_{16}$)
Cover	15, 20	$^1/_2$, $^3/_4$	40	(29)	24	($^{15}/_{16}$)
Valve Seat	15, 20	$^1/_2$, $^3/_4$	15	(11)	12	($^{15}/_{32}$)

1 N·m ≈ 10 kg·cm

Minimum Maintenance Space Required for Disassembly

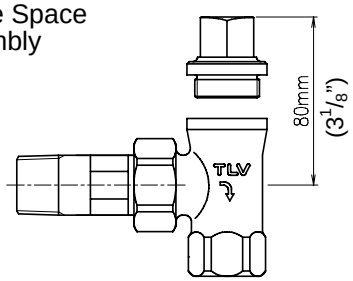

Exploded View

Cover contains:
- Over-expansion Spring
- Spring Guide
- Snap Ring

▸ Do not disassemble the cover

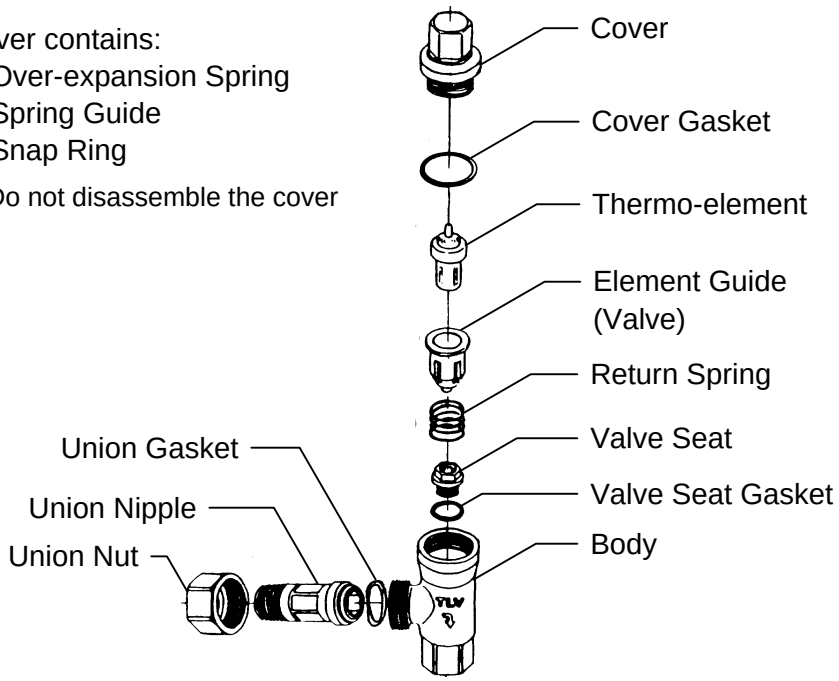

Troubleshooting

⚠CAUTION **When disassembling or removing the product, wait until the internal pressure equals atmospheric pressure and the surface of the product has cooled to room temperature. Disassembling or removing the product when it is hot or under pressure may lead to discharge of fluids, causing burns, other injuries or damage.**

When the product fails to operate properly, use the following table to locate the cause and remedy.

Problem	Cause	Remedy
No condensate is discharged or discharge is poor	There is a build-up of sticky scale between the element guide and the body	Clean the element guide and the inside of the body
	The thermo-element is misshapen	Replace with a new thermo-element
	The trap operating pressure exceeds the maximum specified pressure or there is insufficient pressure differential between the trap inlet and outlet	Compare specifications and actual operating conditions
	The capacity of the trap is insufficient	Compare specifications and actual operating conditions
	Steam locking has occurred	Study and correct the piping
Steam is discharged or leaks from the outlet (blowing) (steam leakage)	The thermo-element is leaking wax	Replace with a new thermo-element
	There is a build-up of sticky scale between the element guide and the body	Clean the element guide and the inside of the body
	The valve and/or valve seat is worn	Replace with a new valve and/or valve seat
	The valve is catching due to sticky build-up	Clean the valve and valve seat surfaces
	The valve seat gasket is damaged	Replace with a new gasket
Steam or condensate is leaking from a place other than the outlet	The cover gasket is damaged	Replace with a new gasket
	Improper cover tightening torque was used	Tighten to the proper torque
	Stress from the piping is exerted on the union	Correct the piping

Product Warranty

1. Warranty Period
   One year following product delivery.

2. Warranty Coverage
   TLV CO., LTD. warrants this product to the original purchaser to be free from defective materials and workmanship. Under this warranty, the product will be repaired or replaced at our option, without charge for parts or labor.

3. This product warranty will not apply to cosmetic defects, nor to any product whose exterior has been damaged or defaced; nor does it apply in the following cases:
   1) Malfunctions due to improper installation, use, handling, etc., by other than TLV CO., LTD. authorized service representatives.
   2) Malfunctions due to dirt, scale, rust, etc.
   3) Malfunctions due to improper disassembly and reassembly, or inadequate inspection and maintenance by other than TLV CO., LTD. authorized service representatives.
   4) Malfunctions due to disasters or forces of nature.
   5) Accidents or malfunctions due to any other cause beyond the control of TLV CO., LTD.

4. Under no circumstances will TLV CO., LTD. be liable for consequential economic loss damage or consequential damage to property.

* * * * * * *

For Service or Technical Assistance:

Contact your TLV representative or your regional TLV office.

Manufacturer

TLV CO., LTD.
881 Nagasuna, Noguchi
Kakogawa, Hyogo 675-8511 JAPAN
Tel: 81-(0)79 - 427 - 1800